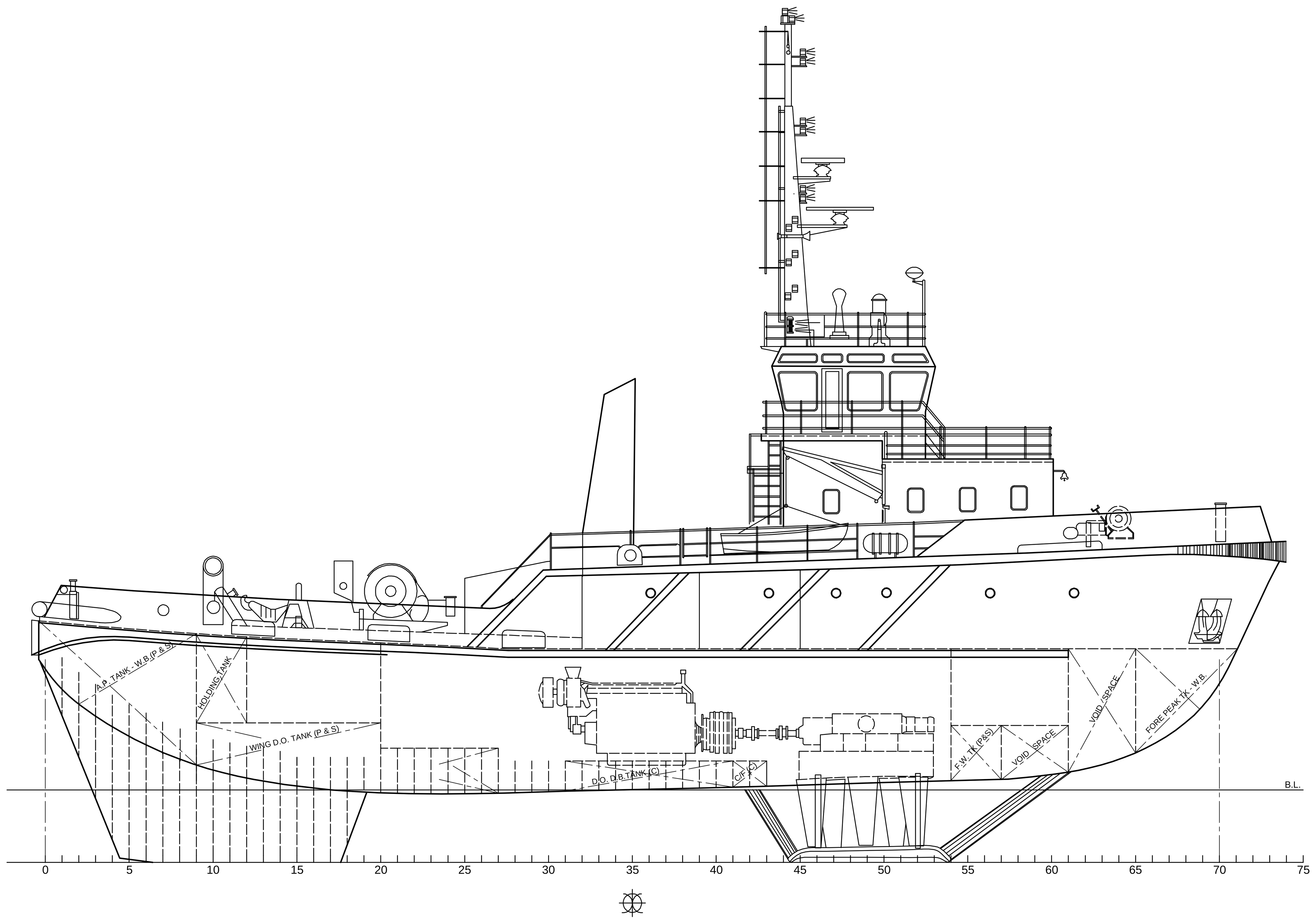

TOP BRIDGE DECK

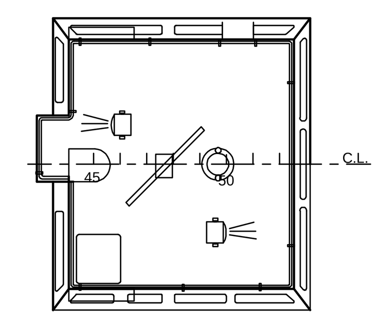

BRIDGE DECK

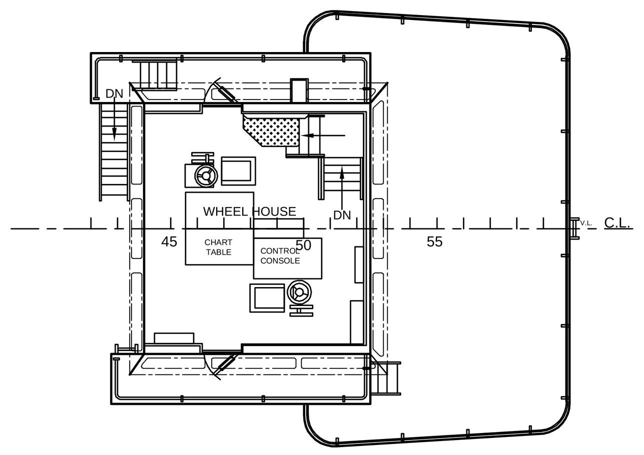

MAIN DECK

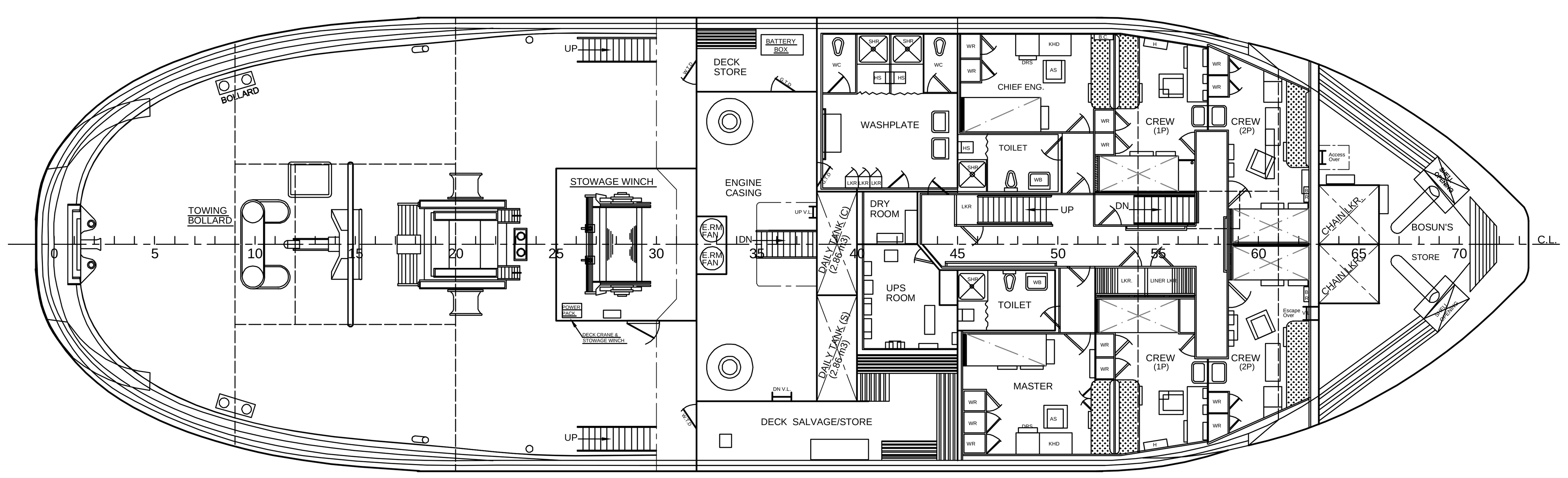

FORECASTLE DECK

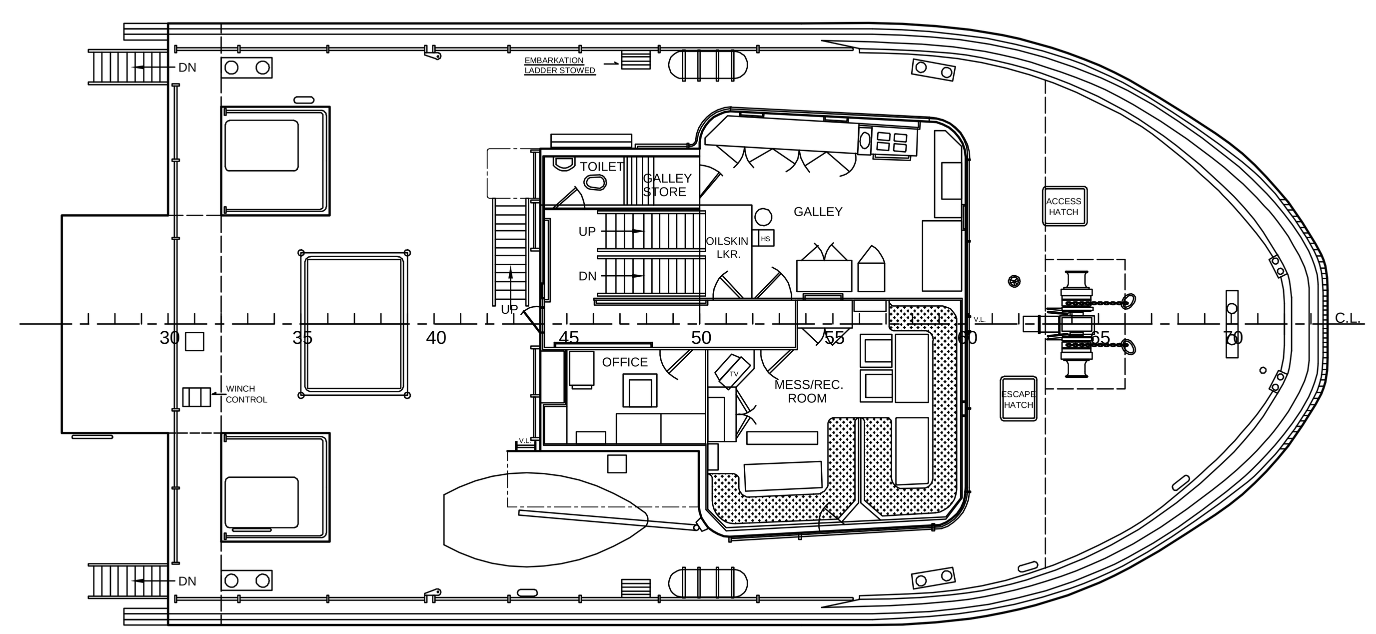

VIEW AT FLOORS LEVEL

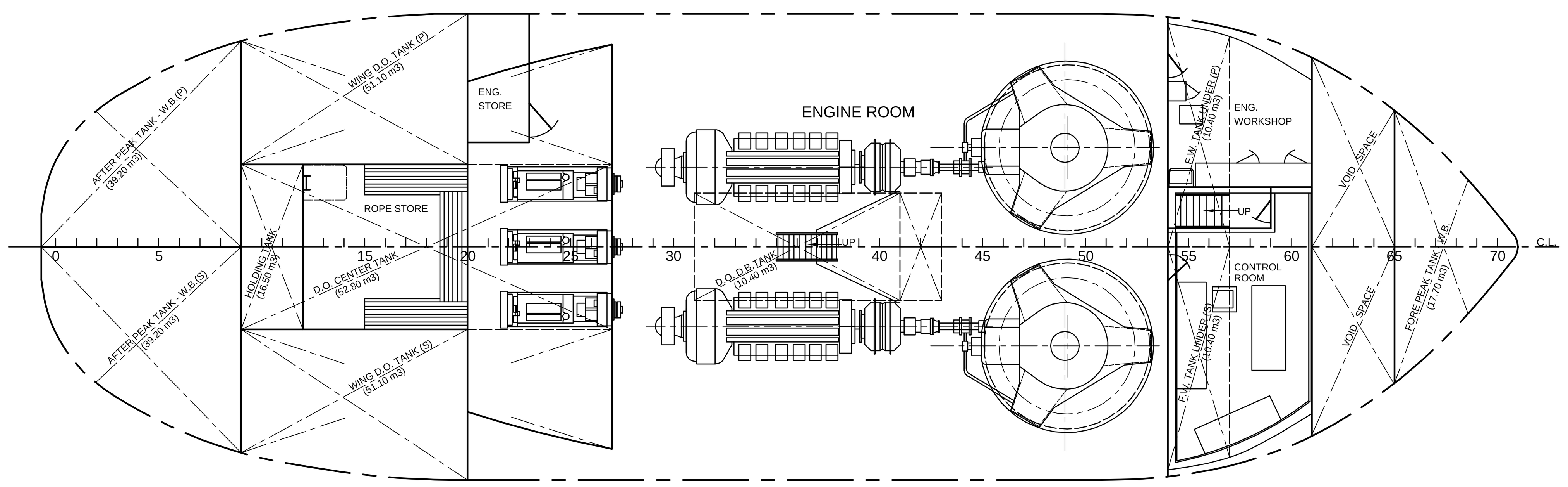

PRINCIPAL DIMENSIONS

Length O.A. ....37.33 m
Length B.P. ....35.00 m
Breadth(mld)......................11.30 m
Depth(mld).........................4.20 m
Draft ....3.20 m
Frame Spacing.................. 0.50 m

NEW HELLENIC SHIPYARDS S.A Kato Pounta, Ampelakia 18902, Salamis - Greece Tel. +30 210 4670224, 4674555, 4677590 Fax. +30 210 4620864 e-mail: info@spanopoulos-group.com www.spanopoulos-group.com	4		
	3		
	2		
	1		
	A/A	Revisions	Date:

Vessel's Name: Tug "CHRISTOS XLI" - IMO No. 8127919

Cad / Cam by :	Date :	Title :	Project Number :
I.T. / N.H.A.	June 2017	GENERAL ARRANGEMENT PLAN	T 179
Checked by:	Date :		Drawing Number : 0717-179-01
N.H.A.	June 2017		Scale : 1:100

GLOBAL COPYRIGHT © THIS DRAWING IS CONFIDENTIAL AND MUST NOT BE COPIED, REPRODUCED ELECTRONICALLY, ALTERED, STORAGED OR UTILISED IN ANY WAY OR EXHIBITED TO ANY THIRD PARTY, WITHOUT THE WRITTEN PERMISSION OF NEW HELLENIC SHIPYARDS S.A.